© Vierbicher Associates, Inc.

REIGSTAD STREET
STREET & UTILITY RECONSTRUCTION
VILLAGE OF DEFOREST

ISSUED: 01/12/2024

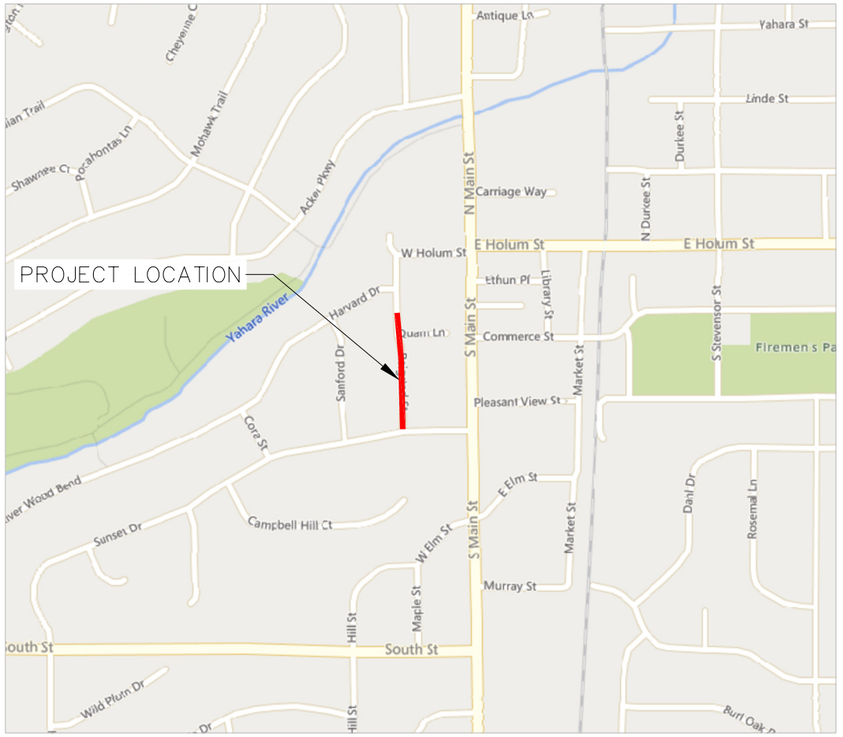

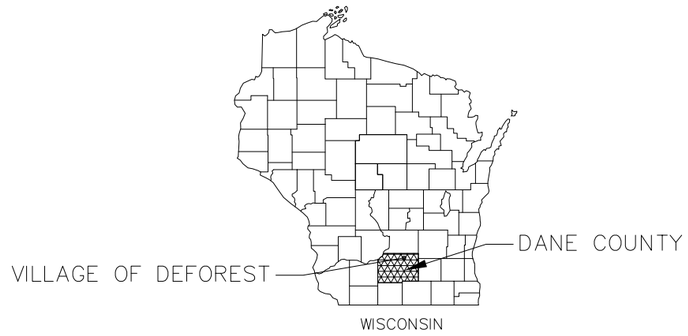

SHEET NO.	DESCRIPTION
1	TITLE SHEET
2	LEGEND & GENERAL NOTES
3–4	REIGSTAD STREET–PLAN & PROFILE
5–8	DETAILS

DIGGERS HOTLINE
Dial 811 or (800) 242-8511
www.DiggersHotline.com

THE LOCATION OF EXISTING UTILITIES, BOTH UNDERGROUND AND OVERHEAD ARE APPROXIMATE ONLY AND HAVE NOT BEEN INDEPENDENTLY VERIFIED BY THE OWNER OR ITS REPRESENTATIVE. THE CONTRACTOR SHALL BE RESPONSIBLE FOR DETERMINING THE EXACT LOCATION OF ALL EXISTING UTILITIES WHETHER SHOWN ON THESE PLANS OR NOT, BEFORE COMMENCING WORK, AND SHALL BE FULLY RESPONSIBLE FOR ANY AND ALL DAMAGES WHICH MIGHT BE CAUSED BY THE CONTRACTOR'S FAILURE TO EXACTLY LOCATE AND PRESERVE ANY AND ALL UTILITIES.

CALL DIGGER'S HOTLINE
1–800–242–8511

SITE BENCHMARKS

1. HYDRANT–TOP NUT
SOUTH OF SUNSET DR & SANFORD DR INTERSECTION
NORTHING: 544837.4320'
EASTING: 831302.6560'
ELEV = 965.311'

2. HYDRANT–TOP NUT
SOUTH OF HARVARD DR & REIGSTAD ST INTERSECTION
NORTHING: 545638.0770'
EASTING: 831437.4940'
ELEV = 941.670'

3. NEED

vierbicher planners engineers advisors

TITLE SHEET
REIGSTAD STREET RECONSTRUCTION
VILLAGE OF DEFOREST
DANE COUNTY, WI

REVISIONS
NO. | DATE | REMARKS

REVISIONS
NO. | DATE | REMARKS

DATE
JANUARY 2023
DRAFTER
NADE
CHECKED
CHECKED
PROJECT NO.
230325
SHEET
1 OF 8

12 Dec 2023 - 3:46p R:\DeForest, Village of\230325 - Reigstad Street Reconstruction\CADD\Reigstad Street Title_Gen Notes_Details.dwg by: nade

© Vierbicher Associates, Inc.

TOPOGRAPHIC SYMBOL LEGEND

- EXISTING BOLLARD
- EXISTING FLAG POLE
- EXISTING MAILBOX
- EXISTING MONITORING WELL
- EXISTING POST
- EXISTING SIGN (TYPE NOTED)
- EXISTING PARKING METER
- EXISTING CURB INLET
- EXISTING ENDWALL
- EXISTING FIELD INLET RECTANGULAR
- EXISTING FIELD INLET
- EXISTING ROOF DRAIN CLEANOUT
- EXISTING ROOF DRAIN
- EXISTING STORM MANHOLE
- EXISTING STORM MANHOLE RECTANGULAR
- EXISTING STORM TRACER WIRE BOX
- EXISTING SANITARY CLEANOUT
- EXISTING SANITARY MANHOLE
- EXISTING SEPTIC VENT
- EXISTING SANITARY TRACER WIRE BOX
- EXISTING FIRE HYDRANT
- EXISTING FIRE DEPARTMENT CONNECTION
- EXISTING WATER MAIN VALVE
- EXISTING CURB STOP
- EXISTING WELL
- EXISTING WATER MANHOLE
- EXISTING WATER TRACER WIRE BOX
- EXISTING GAS VALVE
- EXISTING GAS METER
- EXISTING AIR CONDITIONING PEDESTAL
- EXISTING DOWN GUY
- EXISTING ELECTRIC MANHOLE
- EXISTING ELECTRIC RECTANGULAR MANHOLE
- EXISTING ELECTRIC PEDESTAL
- EXISTING TRANSFORMER
- EXISTING ELECTRIC METER
- EXISTING GUY POLE
- EXISTING LIGHT POLE
- EXISTING GENERIC LIGHT
- EXISTING UTILITY POLE
- EXISTING TV MANHOLE
- EXISTING TV RECTANGULAR MANHOLE
- EXISTING TV PEDESTAL
- EXISTING TELEPHONE MANHOLE
- EXISTING TELEPHONE PEDESTAL
- EXISTING UNIDENTIFIED MANHOLE
- EXISTING UNIDENTIFIED UTILITY VAULT
- EXISTING HANDICAP PARKING
- EXISTING TRAFFIC SIGNAL
- EXISTING SHRUB
- EXISTING CONIFEROUS TREE
- EXISTING DECIDUOUS TREE
- EXISTING BORING
- EXISTING ADA DETECTABLE WARNING FIELD

PROPOSED UTILITY LEGEND

- STORM SEWER PIPE
- STORM SEWER MANHOLE
- STORM SEWER ENDWALL
- STORM SEWER CURB INLET
- STORM SEWER CURB INLET W/MANHOLE
- STORM SEWER FIELD INLET
- ROOF DRAIN CLEANOUT
- SANITARY SEWER PIPE (GRAVITY)
- SANITARY SEWER PIPE (FORCE MAIN)
- SANITARY SEWER LATERAL PIPE
- SANITARY SEWER MANHOLE
- SANITARY SEWER CLEANOUT
- WATER MAIN
- WATER SERVICE LATERAL PIPE
- FIRE HYDRANT
- WATER VALVE
- CURB STOP
- WATER VALVE MANHOLE
- PROPOSED PIPE INSULATION
- GAS MAIN
- ELECTRIC SERVICE

DEMOLITION LEGEND

- TREE REMOVAL
- CONCRETE REMOVAL

TOPOGRAPHIC LINEWORK LEGEND

- EXISTING UNDERGROUND CABLE TV
- EXISTING OVERHEAD CABLE TV
- EXISTING FIBER OPTIC LINE
- EXISTING OVERHEAD TELEPHONE LINE
- EXISTING UNDERGROUND TELEPHONE
- EXISTING RETAINING WALL
- EXISTING CHAIN LINK FENCE
- EXISTING GENERAL FENCE
- EXISTING WIRE FENCE
- EXISTING WOOD FENCE
- EXISTING GAS LINE
- EXISTING UNDERGROUND ELECTRIC LINE
- EXISTING GUY LINE
- EXISTING OVERHEAD ELECTRIC LINE
- EXISTING OVERHEAD GENERAL UTILITIES
- EXISTING SANITARY FORCE MAIN (SIZE NOTED)
- EXISTING SANITARY SEWER LINE (SIZE NOTED)
- EXISTING STORM SEWER LINE (SIZE NOTED)
- EXISTING EDGE OF TREES
- EXISTING WATER MAIN (SIZE NOTED)
- EXISTING WETLAND DELINEATION
- EXISTING MAJOR CONTOUR
- EXISTING MINOR CONTOUR
- EXISTING EDGE OF PAVEMENT
- EXISTING EDGE OF GRAVEL
- EXISTING WETLANDS
- EXISTING GRAVEL SURFACE
- EXISTING CONCRETE SURFACE
- EXISTING ASPHALT SURFACE

GRADING LEGEND

- EXISTING MAJOR CONTOURS
- EXISTING MINOR CONTOURS
- PROPOSED MAJOR CONTOURS
- PROPOSED MINOR CONTOURS
- DITCH CENTERLINE
- SILT FENCE
- DISTURBED LIMITS
- BERM
- DRAINAGE DIRECTION
- PROPOSED SLOPE ARROWS
- EXISTING SPOT ELEVATIONS
- PROPOSED SPOT ELEVATIONS
- STONE WEEPER
- VELOCITY CHECK
- INLET PROTECTION
- EROSION MAT CLASS_____
- EROSION MAT CLASS_____
- TRACKING PAD
- RIP RAP

SURVEY LEGEND

- BENCHMARK
- FOUND CHISELED "X"
- PUBLIC LAND CORNER AS NOTED
- FOUND NAIL
- FOUND 1" ø IRON PIPE
- FOUND 2" ø IRON PIPE
- FOUND P.K. NAIL
- FOUND 1 1/4" ø IRON ROD
- FOUND 3/4" ø IRON ROD
- FOUND RAILROAD SPIKE
- SET CHISELED "X"
- SET NAIL
- SET P.K. NAIL
- SET 1 1/4" ø IRON ROD
- SET 3/4" ø IRON ROD
- SET RAILROAD SPIKE
- GENERAL CONTROL POINT

NOTES:
INSTALL A 50'L x 20'W x 1.5'D ANTI TRACKING PAD AT ENTRANCES TO THE PROJECT. ANTI TRACKING PAD SHALL BE REPLACED AS NECESSARY TO ACCOMMODATE UTILITY CONSTRUCTION.

CONTRACTOR SHALL HAVE A MECHANICAL BROOM ON SITE ON A DAILY BASIS AND SHALL SWEEP THE STREET PAVEMENT OF ADJACENT STREETS DAILY OR MORE AS NEEDED.

INSTALL FRAMED INLET PROTECTION IN EXISTING CURB INLETS AND WI DOT TYPE A IN FIELD INLETS.

ELEVATIONS ON PLAN ARE APPROXIMATE. UTILITY STRUCTURES SHALL BE SET TO FINAL ELEVATIONS AFTER THE CURB AND GUTTER AND BASE COURSE HAVE BEEN INSTALLED.

CONTRACTOR TO ONLY REMOVE ASPHALT AS NECESSARY TO FACILITATE EACH UNDERGROUND UTILITY CONSTRUCTION. REMAINING ASPHALT IS TO BE LEFT IN PLACE UNTIL STREET EXCAVATION IS TO BEGIN. IT IS THE CONTRACTORS RESPONSIBILITY TO ENSURE THAT THE ENTIRE ROADWAY REMAINS IN SUITABLE CONDITION TO ALLOW VEHICLE TRAFFIC. MAINTAINING A SUITABLE ROADWAY SHALL BE INCIDENTAL TO CONSTRUCTION.

RESIDENTS MUST BE PROVIDED ACCESS TO DRIVEWAYS AT THE BEGINNING AND END OF EACH WORK DAY. IT IS THE CONTRACTORS RESPONSIBILITY TO COORDINATE THIS EFFORT AS REQUIRED ADDITIONAL PROVISIONS MAY BE REQUIRED FOR EMERGENCY SERVICES

THE CONTRACTOR IS REQUIRED TO MAKE EROSION CONTROL INSPECTIONS AT THE END OF EACH WEEK AND WHEN 0.5 INCHES OF RAIN FALLS WITHIN 24 HOURS. INSPECTION REPORTS SHALL BE PREPARED AND FILED AS REQUIRED BY THE DNR. ALL MAINTENANCE WILL FOLLOW AN INSPECTION WITHIN 24 HOURS. REPORTS SHALL BE SUBMITTED TO ENGINEER WEEKLY.

THE CONTRACTOR SHALL SUBMIT SHOP DRAWINGS FOR REVIEW BY THE ENGINEER, PRIOR TO PLACING ORDER OF ANY SUCH ITEM

R.O.W. AND PROPERTY LINES ARE APPROXIMATE. CONTRACTOR SHALL BE RESPONSIBLE FOR PROTECTING EXISTING PROPERTY CORNER MONUMENTATION. ANY MONUMENTS DISTURBED BY CONTRACTOR SHALL BE REPLACED AT THE CONTRACTORS EXPENSE.

CONTRACTOR SHALL VERIFY LOCATION OF EXISTING SANITARY SEWER AND WATER MAIN PRIOR TO CONSTRUCTION TO ENSURE PROPER CLEARANCE OF THE NEW UTILITIES. CONTRACTOR MUST TAKE ALL NECESSARY PRECAUTIONS TO PROTECT THE EXISTING UTILITIES DURING CONSTRUCTION. ANY DAMAGE TO THE EXISTING UTILITIES AND ANY REPAIRS NEEDED AS A RESULT OF THE DAMAGE SHALL BE AT THE EXPENSE OF THE CONTRACTOR REGARDLESS OF THE LOCATION MARKED IN THE FIELD OR SHOWN ON THE PLANS.

EXISTING TOPOGRAPHIC INFORMATION IS BASED ON FIELD OBSERVATIONS AND/OR PLAN OF RECORD. CONTRACTOR SHALL VERIFY TOPOGRAPHIC INFORMATION PRIOR TO STARTING CONSTRUCTION.

ALL FINAL GRADES FOR HYDRANTS ARE FINISHED GRADES AT BASE (FLANGE EL) OF HYDRANT

CONTRACTOR SHALL DISPOSE OF TREES AND STUMPS OFF SITE. NO TREES ARE TO BE REMOVED WITHOUT THE APPROVAL OF THE VILLAGE OR ENGINEER.

SEWER AND WATER LATERAL LOCATIONS ARE SHOWN APPROXIMATE. CONTRACTOR SHALL BE RESPONSIBLE FOR LOCATING ALL LIVE LATERALS. ALL SANITARY LIVE LATERALS SHALL BE REPLACED TO THE PROPERTY LINE AND RECONNECTED TO THE EXISTING SANITARY LATERAL. NEW CURB STOPS SHALL BE PLACED 3' OFF THE BACK OF CURB. WATER SERVICES WILL ONLY BE REPLACED TO THE EXISTING CURB STOP OR 3' OFF THE BACK OF CURB. SEWER LATERALS SHALL BE REPLACED WITH 4" MINIMUM OR LARGER TO MATCH EXISTING. NEW WATER LATERALS SHALL BE 1.5" HDPE MINIMUM OR LARGER TO MATCH EXISTING UNLESS NOTED OTHERWISE.

CONTRACTOR IS RESPONSIBLE FOR COORDINATING AND FACILITATING GARBAGE PICK-UP WITH WASTE MANAGEMENT AND RESIDENTS.

CONTRACTOR IS RESPONSIBLE FOR SETTING UP TEMPORARY MAIL BOXES TO ALLOW FOR MAIL DELIVERY AND PICK-UP. MULTIPLE LOCATIONS WILL BE REQUIRED.

CONTRACTOR SHALL COORDINATE WITH DRY UTILITY COMPANY'S REGARDING ANY POTENTIAL CONFLICTS AND COORDINATE RELOCATIONS AS MAY BE REQUIRED. COST OF COORDINATION SHALL BE INCIDENTAL TO CONSTRUCTION, INCLUDING ANY SCHEDULING CONFLICTS

CONTRACTOR SHALL COORDINATE AND COOPERATE WITH THE VILLAGE OF DEFOREST, WDNR, WIDOT AND LOCAL AUTHORITIES. COST OF COOPERATION AND COORDINATION SHALL BE INCIDENTAL TO THE CONTRACT AND SHALL NOT BE A CAUSE FOR ANY EXTRA COMPENSATION FOR TIME EXTENSION AND NO EXTRA COST TO THE OWNER.

CONTRACTOR IS RESPONSIBLE FOR DISPOSAL OF REMOVED PIPE, ASPHALT, CONCRETE AND EXCESS MATERIAL OFF SITE.

THE CONTRACTOR SHALL COORDINATE WITH THE LOCAL PROPERTY OWNERS AND BUSINESS, SO AS TO MAINTAIN ACCESS TO THEIR PROPERTIES DURING CONSTRUCTION ACTIVITIES.

ALL WATER MAIN FITTING (BENDS, TEES, REDUCERS, CROSSES, ETC.) WILL NOT BE PAID FOR SEPARATELY, BUT WILL BE CONSIDERED INCIDENTAL TO THE WATER MAIN.

CONTRACTOR SHALL COORDINATE W/ PROPERTY OWNERS/RESIDENTS REGARDING ACCESS TO DRIVEWAYS AND UTILITY SHUT-OFFS.

DRIVEWAY REPLACEMENT LIMITS ARE APPROXIMATE. WHEN REQUIRED, CONTRACTOR SHALL PROVIDE DRIVEWAY RAMPING DURING CONCRETE CURING PROCESS. (INCIDENTAL TO CONSTRUCTION)

AGENCIES

EMERGENCY – FIRE, RESCUE, AMBULANCE, POLICE
DIAL 911

DEFOREST FIRE DEPARTMENT
DAVID ARNOLD
DEFOREST, WI 53532
(608) 846-4364 NON-EMERGENCY

UNITED STATES POST OFFICE
619 SOUTH MAIN STREET
DEFOREST, WI 53532 (608) 846-5910

DEFOREST POLICE DEPARTMENT
306 DEFOREST ST
DEFOREST, WI 53532
(608) 846-6755 NON-EMERGENCY

UTILITIES

VILLAGE OF DEFOREST -UTILITIES (SEWER & WATER)
205 DEFOREST STREET
DEFOREST, WI 53532
ATTN: GREG HALL, PW PROJECT COORDINATOR
(608) 807-7023

VILLAGE OF DEFOREST -VILLAGE HALL
120 S. STEVENSON STREET
(608) 846-6751

BRIGHTSPEED (TELEPHONE)
19 W FOND DU LAC ST
RIPON, WI 54971
ATTN: TOM DINEEN
(920) 748-2752
(920) 246-7752

BRIGHTSPEED (TERRA TECH CONSULTANT)
19 W FOND DU LAC ST
RIPON, WI 54971
ATTN: ANDREW HUFF
(419) 305-2704

ALLIANT ENERGY (ELECTRIC)
6462 BLANCHAR'S CROSSING
WINDSOR, WI 53598
ATTN: KAI GRAFF
(608) 459-5797 CELL

CHARTER COMMUNICATIONS (CABLE TV)
2701 DANIELS STREET
MADISON, WI 53718
ATTN: BRAD WAGNER
CELL: (608) 640-9407

MADISON GAS & ELECTRIC (GAS)
623 RAILROAD STREET
MADISON, WI 53701
ATTN: RODGER AHLES
(608) 252-5682

TDS
525 JUNCTION RD
MADISON, WI 53717
ATTN: JOE McNEELY
(608) 370-4198

EVERSTREAM
ATTN: ABIGAIL STEIN
(414) 409-9316

AT&T
ATTN: TODD NOORDA
(608) 556-7199

vierbicher planners engineers advisors

LEGEND & GENERAL NOTES

REIGSTAD STREET RECONSTRUCTION
VILLAGE OF DEFOREST
DANE COUNTY, WI

REVISIONS

NO.	DATE	REMARKS

REVISIONS

NO.	DATE	REMARKS

DATE
JANUARY 2023

DRAFTER
NADE

CHECKED
CHECKED

PROJECT NO.
230325

SHEET
2 OF 8

08 Nov 2023 - 9:37a R:\DeForest, Village of\230325 - Reigstad Street Reconstruction\CADD\Reigstad Street Title_Gen Notes_Details.dwg by: nade

© Vierbicher Associates, Inc.

LEGEND

- CONCRETE SIDEWALK (4" THICK)
- CONCRETE DRIVEWAY REPLACEMENT (6" THICK)
- ASPHALT ROAD (3.75" THICK)
- DRIVEWAY REPLACEMENT (2.75" ASPHALT)

GRAPHIC SCALE, FEET
0 10 20 40

CONTRACTOR TO LOCATE AND CONNECT ALL EXISTING SANITARY LATERALS TO THE MAIN. LATERALS LOCATIONS AS SHOWN ON THE PLANS ARE ONLY APPROXIMATE

CONTRACTOR TO COORDINATE WITH DRY UTILITY COMPANY'S REGARDING ANY POTENTIAL CONFLICTS AND COORDINATE RELOCATIONS AS MAY BE REQUIRED

WHERE WATER MAIN CROSSES SANITARY, MAINTAIN 6" OF SEPARATION IF ABOVE AND 18" IF BELOW

WATER SERVICES TO HAVE MINIMUM 6.5' OF COVER TO CURB STOP

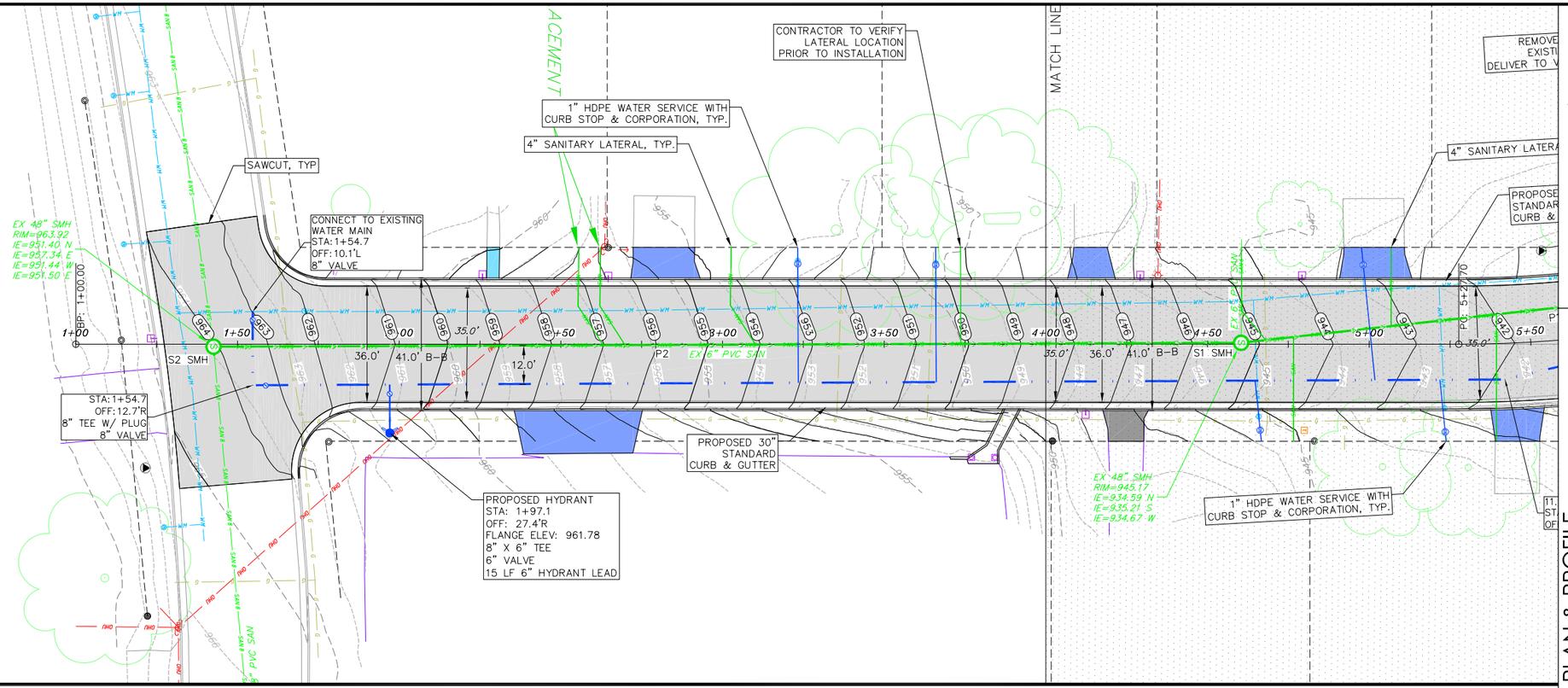

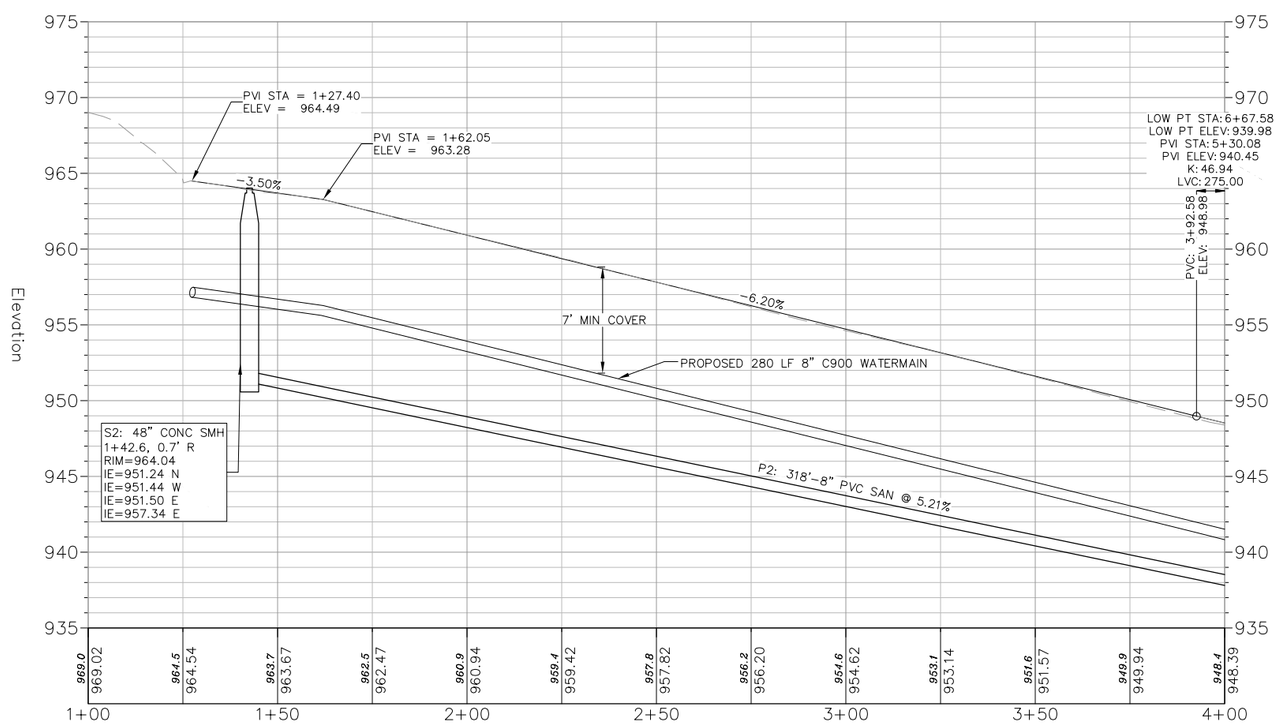

vierbicher planners engineers advisors

REIGSTAD STREET - PLAN & PROFILE

REIGSTAD STREET RECONSTRUCTION
VILLAGE OF DEFOREST
DANE COUNTY, WI

REVISIONS			
NO.	DATE	REMARKS	

REVISIONS			
NO.	DATE	REMARKS	

DATE: JANUARY 2023
DRAFTER: NADE
CHECKED: CHECKED
PROJECT NO.: 230325
SHEET: 3 OF 8

12 Dec 2023 - 3:46p R:\DeForest, Village of\230325 - Reigstad Street Reconstruction\CADD\Reigstad Street Base Engineering.dwg by: nade

© Vierbicher Associates, Inc.

CONTRACTOR TO VERIFY LATERAL LOCATION PRIOR TO INSTALLATION

REMOVE & SALVAGE EXISTING HYDRANT DELIVER TO VILLAGE SHOP

4" SANITARY LATERAL, TYP.

PROPOSED 30" STANDARD CURB & GUTTER

11.25 DEG WM BEND
STA: 6+16.4
OFF: 3.1'R

SAWCUT, TYP

EX 48" SMH
RIM=939.90
IE=930.90 N
IE=930.86 S

EX 6" PVC SAN

EX 6" PVC SAN

EX 48" SMH
RIM=945.17
IE=934.59 N
IE=935.21 S
IE=934.67 W

1" HDPE WATER SERVICE WITH CURB STOP & CORPORATION, TYP.

11.25 DEG WM BEND
STA: 5+41.6
OFF: 11.2'R

PROPOSED HYDRANT
STA: 6+34.9
OFF: 24.8'R
FLANGE ELEV: 940.48
8" X 6" TEE
8" VALVE
6" VALVE
18 LF 6" HYDRANT LEAD

CONNECT TO EXISTING SAN STUB TO THE SOUTH.
EXISTING SAN MANHOLE TO REMAIN.
STA: 6+91.2, OFF: 3.3'L
IE = 930.86
CONTRACTOR TO CONFIRM

CONNECT TO EXISTING WATER MAIN TEE.
CONTRACTOR TO VERIFY LOCATION AND ELEVATION.
STA: 6+87.7, OFF: 10.0'R

MATCH LINE

QUAM LANE

GRAPHIC SCALE, FEET
0 10 20 40

LEGEND
- CONCRETE SIDEWALK (4" THICK)
- CONCRETE DRIVEWAY REPLACEMENT (6" THICK)
- ASPHALT ROAD (3.75" THICK)
- DRIVEWAY REPLACEMENT (2.75" ASPHALT)

CONTRACTOR TO LOCATE AND CONNECT ALL EXISTING SANITARY LATERALS TO THE MAIN. LATERALS LOCATIONS AS SHOWN ON THE PLANS ARE ONLY APPROXIMATE

CONTRACTOR TO COORDINATE WITH DRY UTILITY COMPANY'S REGARDING ANY POTENTIAL CONFLICTS AND COORDINATE RELOCATIONS AS MAY BE REQUIRED

WHERE WATER MAIN CROSSES SANITARY, MAINTAIN 6" OF SEPARATION IF ABOVE AND 18" IF BELOW

WATER SERVICES TO HAVE MINIMUM 6.5' OF COVER TO CURB STOP

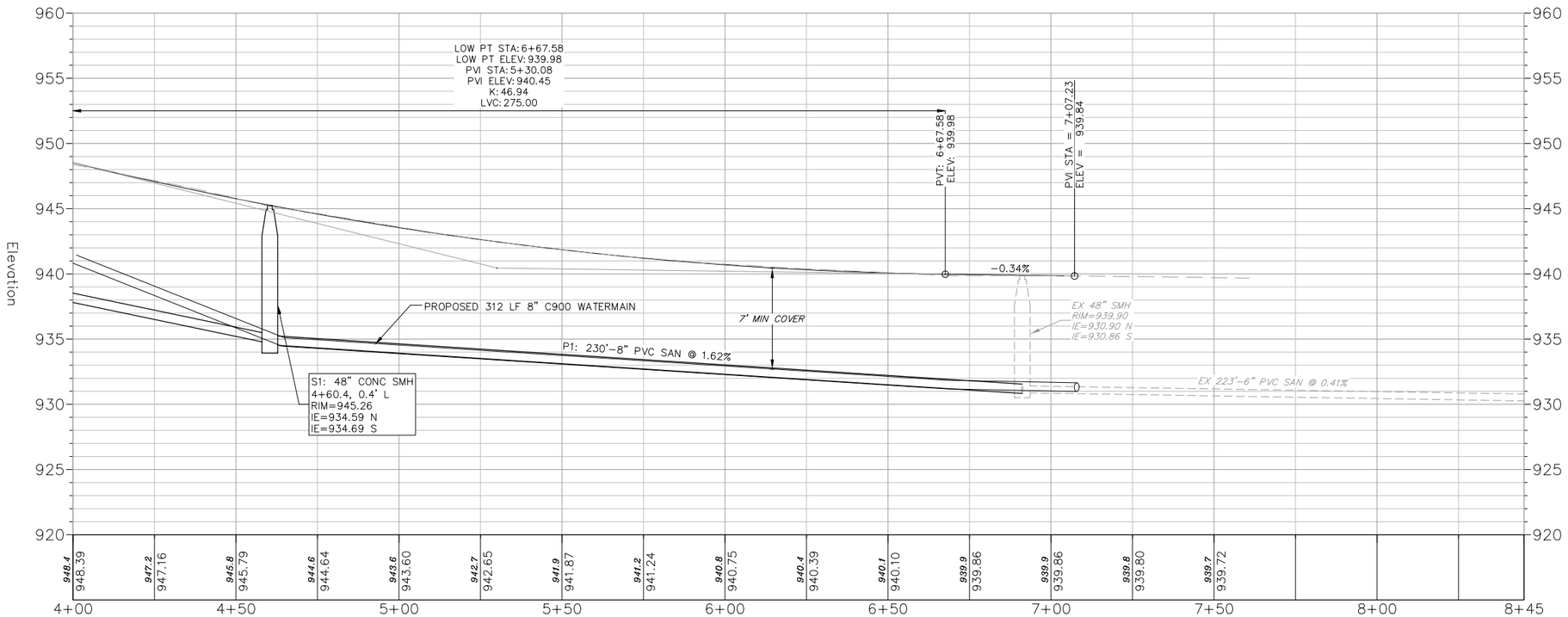

vierbicher
planners engineers advisors

REIGSTAD STREET - PLAN & PROFILE

REIGSTAD STREET RECONSTRUCTION
VILLAGE OF DEFOREST
DANE COUNTY, WI

REVISIONS			
NO.	DATE	REMARKS	

REVISIONS			
NO.	DATE	REMARKS	

DATE: JANUARY 2023
DRAFTER: NADE
CHECKED: CHECKED
PROJECT NO.: 230325
SHEET: 4 OF 8

12 Dec 2023 - 3:46p R:\DeForest, Village of\230325 - Reigstad Street Reconstruction\CADD\Reigstad Street Base Engineering.dwg by: nade

© Vierbicher Associates, Inc.

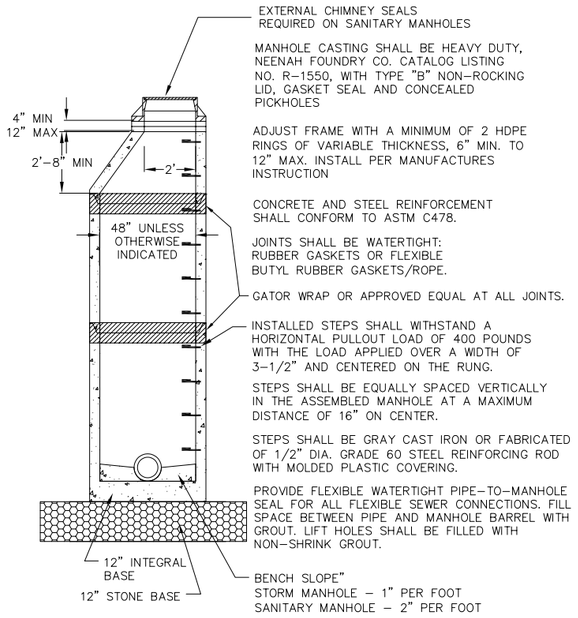

1/5 SANITARY SEWER MANHOLE
NOT TO SCALE

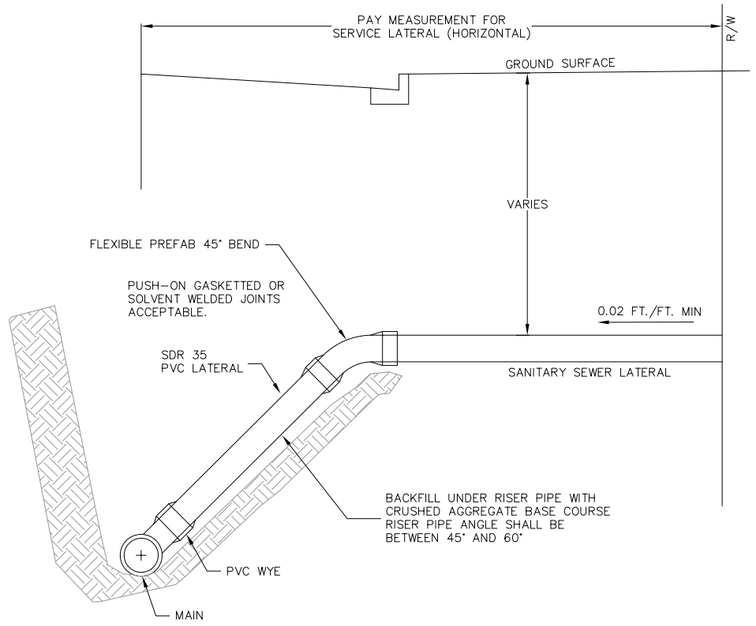

2/5 SANITARY SEWER LATERAL RISER (WHEN REQ'D)
NOT TO SCALE

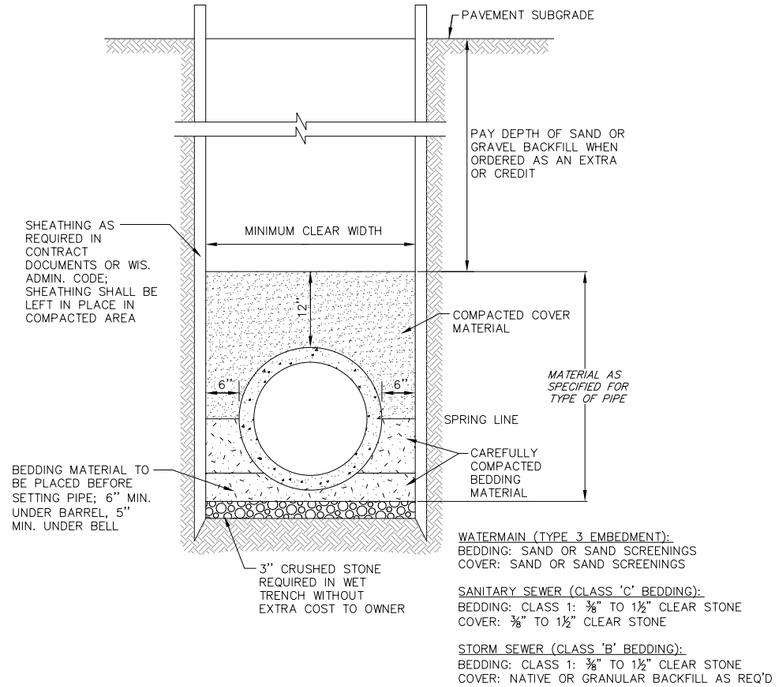

WATERMAIN (TYPE 3 EMBEDMENT):
BEDDING: SAND OR SAND SCREENINGS
COVER: SAND OR SAND SCREENINGS

SANITARY SEWER (CLASS 'C' BEDDING):
BEDDING: CLASS 1: ⅜" TO 1½" CLEAR STONE
COVER: ⅜" TO 1½" CLEAR STONE

STORM SEWER (CLASS 'B' BEDDING):
BEDDING: CLASS 1: ⅜" TO 1½" CLEAR STONE
COVER: NATIVE OR GRANULAR BACKFILL AS REQ'D

3/5 STANDARD TRENCH SECTION
NOT TO SCALE

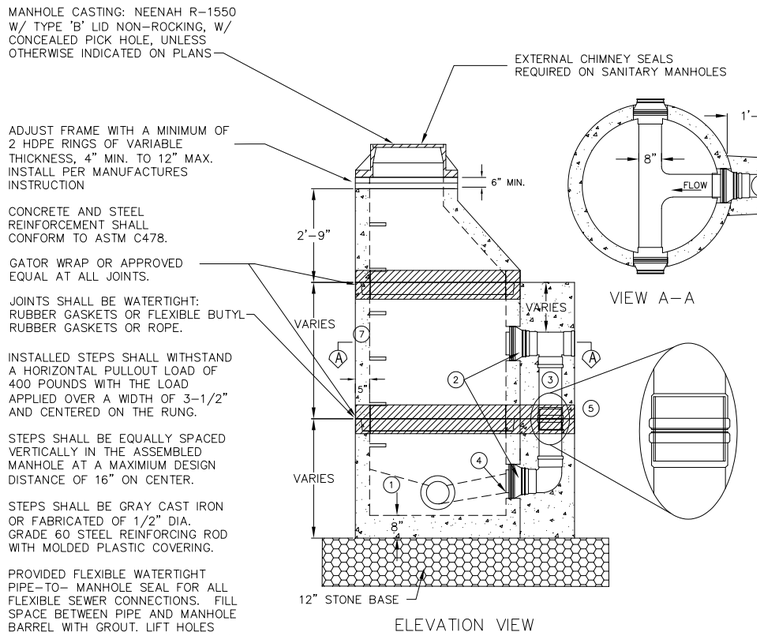

NOTES
1. PRECAST BENCH TROWELED TO A 1" PER FOOT SLOPE OR AS SPECIFIED BY THE DESIGN ENGINEER.
2. KOR–N–SEAL FLEXIBLE MANHOLE ENTRY GASKETS.
3. 8" DIA. SDR–35 PVC PIPE.
4. INVERT OF DROP PIPE ENTERS MANHOLE AT THE SPRINGLINE OF OUTFLOW PIPE OR AS SPECIFIED BY THE DESIGN ENGINEER.
5. HUB TO HUB CONNECTION WITH GASKETED JOINTS. A SHORT DOUBLE ENDED TONGUE PIPE COMPLETES THE CONNECTION.

ADDITIONAL NOTES
6. DIMENSIONS OF THE CONCRETE ENCASEMENT WILL VARY FOR LARGER DIA. DROP PIPE.
7. FOR FURTHER INFORMATION REGARDING MANHOLE SPECIFICATIONS PLEASE SEE DETAIL DRAWING FOR "STANDARD 48" DIA. PRECAST MANHOLE".

4/5 PRE–CAST CONCRETE OUTSIDE DROP MANHOLE
NOT TO SCALE

NOTES

MR. MANHOLE MACHINE OR APPROVED EQUAL SHALL BE USED TO TO ADJUST ALL EXISTING AND PROPOSED RIMS SHALL BE ADJUSTED PER MANUFACTURES RECOMMENDATIONS.

GROUTS SHALL ONLY BE USED IN AND AROUND THE INVERT OF THE PIPE AND SHALL NOT BE USED FOR THE CONCRETE COLLAR

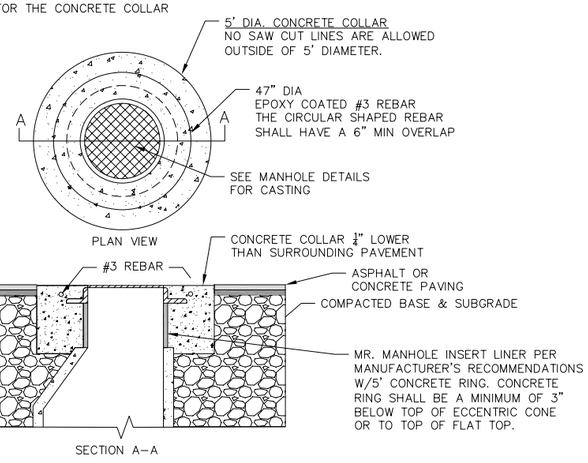

5/5 ROUND CONCRETE COLLAR
NOT TO SCALE

vierbicher planners engineers advisors

DETAILS
REIGSTAD STREET RECONSTRUCTION
VILLAGE OF DEFOREST
DANE COUNTY, WI

REVISIONS	NO.	DATE	REMARKS

REVISIONS	NO.	DATE	REMARKS

DATE: JANUARY 2023
DRAFTER: NADE
CHECKED: CHECKED
PROJECT NO.: 230325
SHEET: 5 OF 8

08 Nov 2023 - 9:38a R:\DeForest. Village of\230325 - Reigstad Street Reconstruction\CADD\Reigstad Street Title_Gen Notes_Details.dwg by: nade

© Vierbicher Associates, Inc.

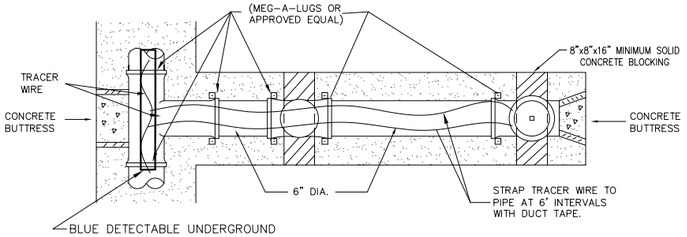

FIRE HYDRANTS SHALL CONFORM TO CHAPTER 8.26.0 OF THE STANDARD SPECIFICATIONS FOR SEWER AND WATER CONSTRUCTION IN WISCONSIN, SIXTH EDITION. HYDRANTS SHALL BE WATEROUS PACER WB67 WITH 5 ¼" VALVE OPENING WITH TWO 2 ½" NOZZLE OPENINGS AND ONE 4 ½" PUMPER NOZZLE WITH CAPS AND CHAINS. DEPTH OF BURY SHALL BE FOR 7' (OR AS REQUIRED FOR VARYING DEPTHS) TO ACCOMMODATE THE 6.5' MINIMUM COVER, AND HAVE A GROUND LINE BREAKABLE FLANGE. HYDRANTS SHALL BE EQUIPPED WITH A FIBERGLASS ROD MARKER WITH SPRING (RED & WHITE) AND A STORZ NOZZLE. HYDRANT COLOR SHALL BE RED, ORIGINAL MANUFACTURER ENAMEL COATING.

TRACER WIRE SHALL FOLLOW ALONG HYDRANT LEAD UP TO THE SURFACE AND BACK ALONG THE HYDRANT LEAD AND CONTINUE ALONG THE MAIN. TRACER WIRE SHALL BE BROUGHT TO THE SURFACE INSIDE OF A ¾" ATTACHED CONDUIT TO THE HYDRANT. CONDUIT SHALL BE ATTACHED TO THE HYDRANT WITH DUCT-TAPE AT 1.5' INTERVALS. 18" OF SLACK SHALL REMAIN FOR CONNECTION PURPOSES AT THE HYDRANT. TWO FEET OF SLACK SHALL BE LEFT AT THE END OF THE NEW WATER MAIN CONSTRUCTION FOR FUTURE CONNECTION.

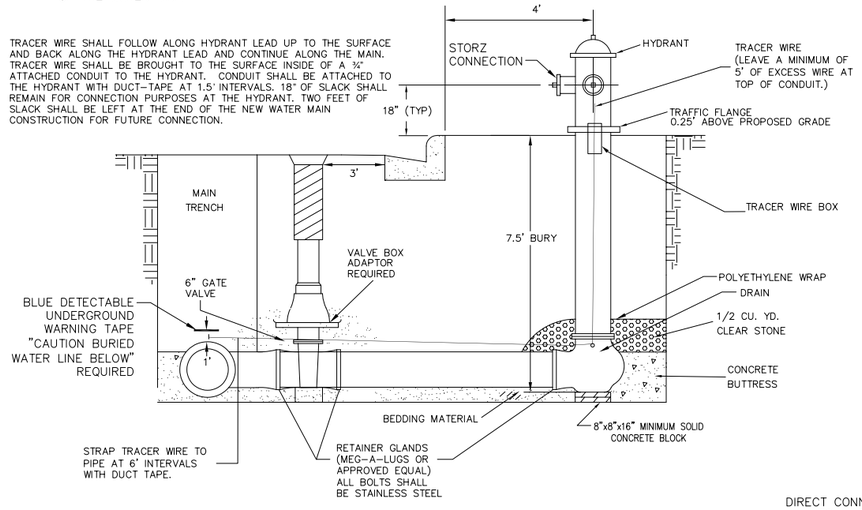

1 / 6 STANDARD HYDRANT SETTING
NOT TO SCALE

ALL MEGA-LUG CONNECTIONS REQUIRE STAINLESS STEEL BOLTS ALL FITTINGS SHALL BE MADE IN USA

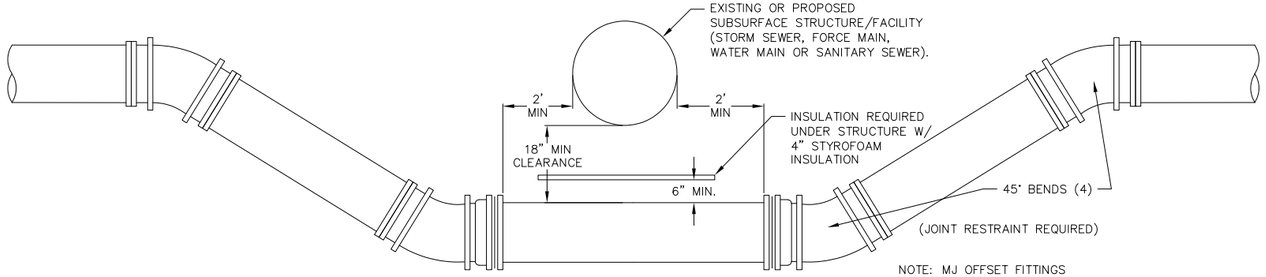

NOTE: MJ OFFSET FITTINGS MAY BE USED IF APPROVED BY THE ENGINEER

2 / 6 LOWERING WATERMAIN
NOT TO SCALE

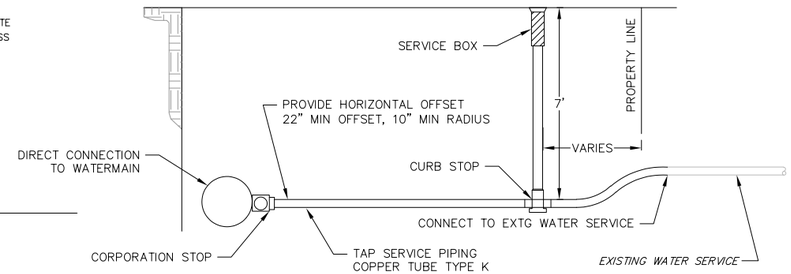

3 / 6 WATER SERVICE
NOT TO SCALE

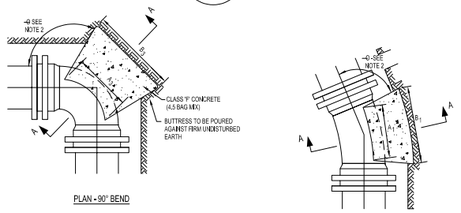

BUTTRESS DIMENSIONS						
PIPE SIZE	22 1/2° BENDS		45° BENDS		90° BENDS	
	b_1	b_1	b_2	b_2	b_3	b_3
6"	1'-0"	1'-3"	1'-0"	1'-0"	1'-4"	1'-3"
8"	1'-0"	1'-3"	1'-4"	1'-3"	1'-10"	1'-8"
12"	1'-4"	1'-4"	1'-10"	1'-10"	2'-8"	2'-3"
16"	1'-10"	1'-8"	2'-6"	2'-4"	3'-10"	2'-10"
20"	2'-4"	2'-0"	3'-3"	2'-10"	5'-0"	3'-4"
24"	2'-10"	2'-4"	4'-0"	3'-3"	6'-4"	3'-10"
30"	3'-8"	3'-0"	5'-4"	3'-10"	8'-0"	4'-8"

NOTES
1. DIMENSIONS IN TABLE ARE BASED ON A WATER PRESSURE OF 150 psi AND ON EARTH RESISTANCE OF 2 TONS PER SQUARE FOOT.
2. DIMENSION C1 C2 C3 SHOULD BE LARGE ENOUGH TO MAKE ANGLE Ø EQUAL TO OR LARGER THAN 45°
3. DIMENSION A1 A2 A3 SHOULD BE AS LARGE AS POSSIBLE WITHOUT INTERFERRING WITH M.J. BOLTS.
4. SHAPE OF BACK OF BUTTRESS MAY VARY AS LONG AS POUR IS AGAINST FIRM UNDISTURBED EARTH.
5. ALL IRON PIPE AND FITTINGS SHALL BE WRAPPED IN POLYETHYLENE.

NOTE: GATE VALVE ADAPTORS ARE MANDITORY IN THE VILLAGE OF DEFOREST

MANUFACTURED BY ADAPTOR, INC. 3642 E. AMERICAN AVE. MILWAUKEE, WI 53154

GATE VALVE ADAPTOR

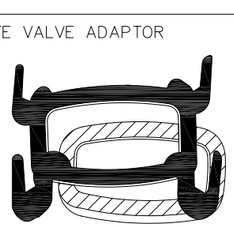

GATE VALVE ADAPTOR 1/4" STEEL WITH UNDERGROUND COATING

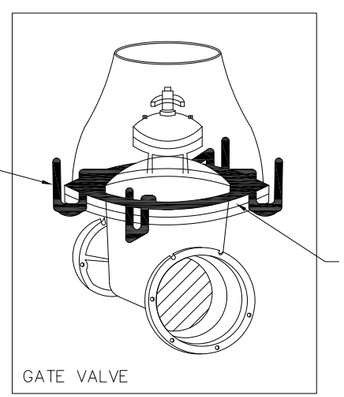

1/2" NEO-PRENE GASKET INSTALLED BETWEEN THE GATE VALVE AND GATE VALVE ADAPTOR TO ABSORB ANY PRESSURE OR MOVEMENT CAUSED BY ROAD TRAFFIC

4 / 6 GATE VALVE AND GATE VALVE ADAPTOR
NOT TO SCALE

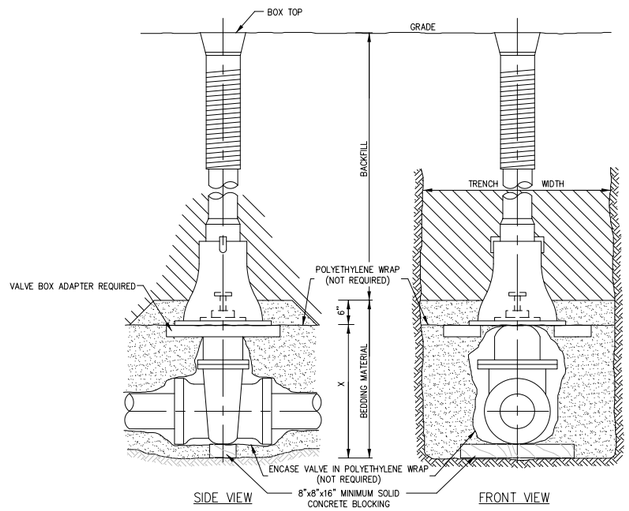

PIPE DIA. INCHES	X=SETTING INCHES
2	6
3	7
4	8
6	12
8	13
12	21
16	30

VALVES SHALL BE AMERICAN FLOW CONTROL'S SERIES 2500 DUCTILE IRON, RESILIENT WEDGE, OR EQUAL. VALVE BOXES SHALL CONFORM TO CHAPTER 8.29.0 OF THE STANDARD SPECIFICATIONS FOR SEWER AND WATER CONSTRUCTION IN WISCONSIN, SIXTH EDITION, SPECIFIED FOR 7-FOOT BURY (OR AS REQUIRED FOR VARYING DEPTHS), AND INCLUDE A VALVE BOX ADAPTOR, ADAPTOR INC, OR EQUAL. VALVE BOX COVER SHALL BE MARKED "WATER."

5 / 6 STANDARD GATE VALVE BOX SETTING
NOT TO SCALE

vierbicher planners engineers advisors

DETAILS
REIGSTAD STREET RECONSTRUCTION
VILLAGE OF DEFOREST
DANE COUNTY, WI

REVISIONS
NO. DATE REMARKS

REVISIONS
NO. DATE REMARKS

DATE JANUARY 2023
DRAFTER NADE
CHECKED CHECKED
PROJECT NO. 230325
SHEET 6 OF 8

08 Nov 2023 - 9:38a R:\DeForest, Village of\230325 - Reigstad Street Reconstruction\CADD\Reigstad Street Title_Gen Notes_Details.dwg by: nade

© Vierbicher Associates, Inc.

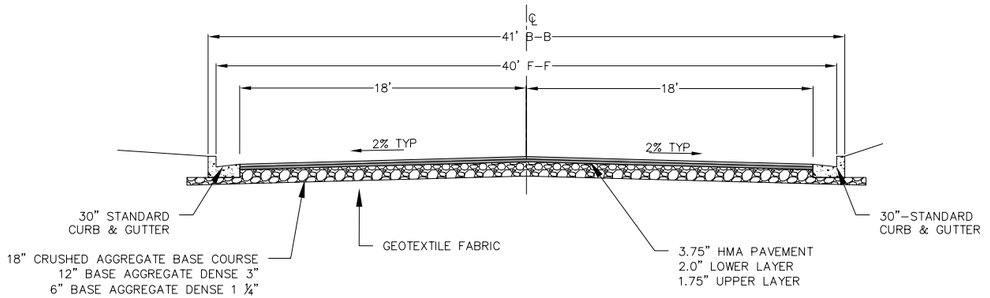

1/7 TYPICAL SECTION– 41' B–B

NOT TO SCALE

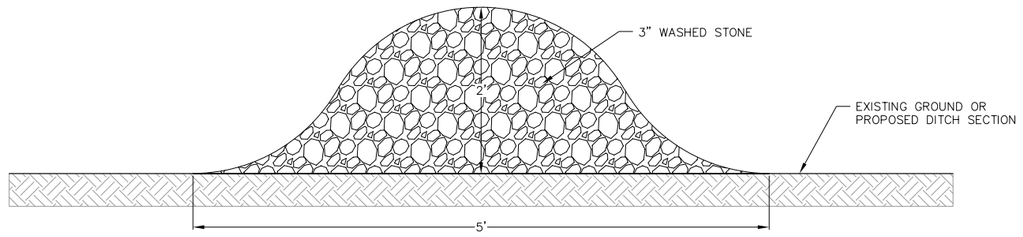

2/7 TEMPORARY WEEPER BERM

NOT TO SCALE

vierbicher
planners | engineers | advisors

STREET DETAILS

REIGSTAD STREET RECONSTRUCTION
VILLAGE OF DEFOREST
DANE COUNTY, WI

REVISIONS

NO.	DATE	REMARKS

REVISIONS

NO.	DATE	REMARKS

DATE
JANUARY 2023

DRAFTER
NADE

CHECKED
CHECKED

PROJECT NO.
230325

SHEET
7 OF 8

08 Nov 2023 - 9:38a R:\DeForest, Village of\230325 - Reigstad Street Reconstruction\CADD\Reigstad Street Title_Gen Notes_Details.dwg by: nade

© Vierbicher Associates, Inc.

EROSION CONTROL MEASURES

1. EROSION CONTROL SHALL BE IN ACCORDANCE WITH THE VILLAGE OF DEFOREST EROSION CONTROL ORDINANCE AND CHAPTER NR 216 OF THE WISCONSIN ADMINISTRATIVE CODE.

2. CONSTRUCT AND MAINTAIN ALL EROSION AND SEDIMENT CONTROL MEASURES IN ACCORDANCE WITH WISCONSIN DNR TECHNICAL STANDARDS (http://dnr.wi.gov/runoff/stormwater/techstds.htm) AND WISCONSIN CONSTRUCTION SITE BEST MANAGEMENT PRACTICE HANDBOOK.

3. INSTALL SEDIMENT CONTROL PRACTICES (TRACKING PAD, PERIMETER SILT FENCE, SEDIMENT BASINS, ETC.) PRIOR TO INITIATING OTHER LAND DISTURBING CONSTRUCTION ACTIVITIES.

4. THE CONTRACTOR IS REQUIRED TO MAKE EROSION CONTROL INSPECTIONS AT THE END OF EACH WEEK AND WHEN 0.5 INCHES OF RAIN FALLS WITHIN 24 HOURS. INSPECTION REPORTS SHALL BE PREPARED AND FILED AS REQUIRED BY THE DNR AND CITY.. ALL MAINTENANCE WILL FOLLOW AN INSPECTION WITHIN 24 HOURS.

5. EROSION CONTROL IS THE RESPONSIBILITY OF THE CONTRACTOR UNTIL ACCEPTANCE OF THIS PROJECT. EROSION CONTROL MEASURES AS SHOWN SHALL BE THE MINIMUM PRECAUTIONS THAT WILL BE ALLOWED. ADDITIONAL EROSION CONTROL MEASURES, AS REQUESTED IN WRITING BY THE STATE OR LOCAL INSPECTORS, OR THE DEVELOPER'S ENGINEER, SHALL BE INSTALLED WITHIN 24 HOURS.

6. A 3" CLEAR STONE ANTI TRACKING PAD SHALL BE INSTALLED AT THE END OF ROAD CONSTRUCTION LIMITS TO PREVENT SEDIMENT FROM BEING TRACKED ONTO THE ADJACENT PAVED PUBLIC ROADWAY. SEDIMENT ANTI TRACKING PAD SHALL CONFORM TO WisDNR TECHNICAL STANDARD 1057. SEDIMENT REACHING THE PUBLIC ROAD SHALL BE REMOVED BY STREET CLEANING (NOT HYDRAULIC FLUSHING) BEFORE THE END OF EACH WORK DAY.

7. CHANNELIZED RUNOFF: FROM ADJACENT AREAS PASSING THROUGH THE SITE SHALL BE DIVERTED AROUND DISTURBED AREAS.

8. STABILIZED DISTURBED GROUND: ANY SOIL OR DIRT PILES WHICH WILL REMAIN IN EXISTENCE FOR MORE THAN 7-CONSECUTIVE DAYS, WHETHER TO BE WORKED DURING THAT PERIOD OR NOT, SHALL NOT BE LOCATED WITHIN 25-FEET OF ANY ROADWAY, PARKING LOT, PAVED AREA, OR DRAINAGE STRUCTURE OR CHANNEL (UNLESS INTENDED TO BE USED AS PART OF THE EROSION CONTROL MEASURES). TEMPORARY STABILIZATION AND CONTROL MEASURES (SEEDING, MULCHING, TARPING, EROSION MATTING, BARRIER FENCING, ETC.) ARE REQUIRED FOR THE PROTECTION OF DISTURBED AREAS AND SOIL PILES, WHICH WILL REMAIN UN-WORKED FOR A PERIOD OF MORE THAN 14-CONSECUTIVE CALENDAR DAYS. THESE MEASURES SHALL REMAIN IN PLACE UNTIL SITE HAS STABILIZED.

9. SITE DE-WATERING: WATER PUMPED FROM THE SITE SHALL BE TREATED BY TEMPORARY SEDIMENTATION BASINS OR OTHER APPROPRIATE CONTROL MEASURES. SEDIMENTATION BASINS SHALL HAVE A DEPTH OF AT LEAST 3 FEET, BE SURROUNDED BY SNOWFENCE OR EQUIVALENT BARRIER AND HAVE SUFFICIENT SURFACE AREA TO PROVIDE A SURFACE SETTLING RATE OF NO MORE THAN 750 GALLONS PER SQUARE FOOT PER DAY AT THE HIGHEST DEWATERING PUMPING RATE. WATER MAY NOT BE DISCHARGED IN A MANNER THAT CAUSES EROSION OF THE SITE, A NEIGHBORING SITE, OR THE BED OR BANKS OF THE RECEIVING WATER. POLYMERS MAY BE USED AS DIRECTED BY DNR TECHNICAL STANDARD 1061 (DE-WATERING).

CONSTRUCTION SEQUENCE OF WORK
1. INSTALL TRACKING PAD PER DETAIL AT ALL ENTRANCES TO SITE
2. INSTALL SILT FENCE AT AREAS WHERE STORMWATER RUNOFF IS POSSIBLE
3. CONSTRUCT UNDERGROUND UTILITIES
4. CONSTRUCT STREET
5. RESTORE WORK AREA(S)
6. AFTER CONSTRUCTION SITE IS RESTORED – REMOVE SILT FENCE

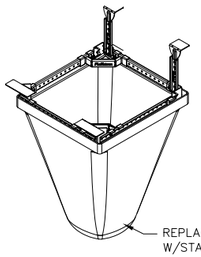

FLEXSTORM CATCH-IT INLET FITLERS FOR ROLLED CURB

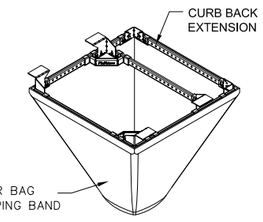

FLEXSTORM CATCH-IT INLET FITLERS FOR CURB BOX OPENINGS (MAGNETIC CURB FLAP)

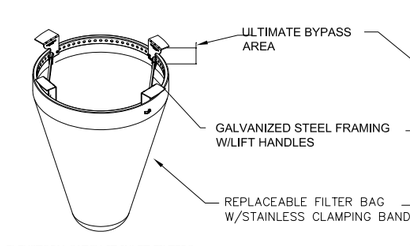

FLEXSTORM CATCH-IT INLET FILTERS FOR ROUND OPENINGS

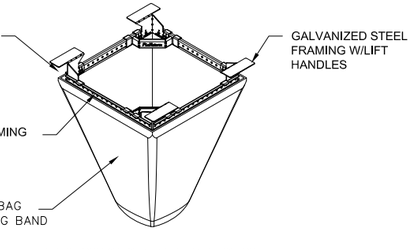

FLEXSTORM CATCH-IT INLET FITLERS FOR SQUARE/RECTANGULAR OPENINGS

NEENAH CASTING	INLET TYPE	GRATE SIZE	OPENING SIZE	ADS P/N
1040/1642/1733	ROUND	26	24	62MRDFX
3067 W/FLAP	CURB BOX	35.25 X 17.75	33.0 X 15.0	62LCBEXTFX
3067 EXTENDED BACK	CURB BOX	35.25 X 17.75	33.0 X 15.0	62LCBEXTFX
3246A	CURB BOX	35.75 X 23.875	33.5 X 21.0	62LCBFX
3030	SQUARE/RECT	23 X 16	20.5 X 13.5	62MCBFX
3067-C	SQUARE/RECT	35.25 X 17.75	33 X 15	62LSQFX

1/8 FRAMED INLET PROTECTION
NOT TO SCALE

EROSION CONTROL MEASURES

1. SEE DETAIL SHEETS FOR RIP-RAP SIZING. IN NO CASE WILL RIP-RAP BE SMALLER THAN 3" TO 6".

2. INLET FILTERS ARE TO BE PLACED IN STORMWATER INLET STRUCTURES AS SOON AS THEY ARE INSTALLED. ALL PROJECT AREA STORM INLETS NEED WISCONSIN D.O.T. TYPE D INLET PROTECTION. THE FILTERS SHALL BE MAINTAINED UNTIL THE CITY HAS ACCEPTED THE BINDER COURSE OF ASPHALT.

3. TERRACES SHALL BE RESTORED WITH 6" TOPSOIL, PERMANENT SEED, FERTILIZER AND MULCH. LOTS SHALL BE RESTORED WITH 6" TOPSOIL, TEMPORARY SEED, FERTILIZER AND MULCH.

4. SEED, FERTILIZER AND MULCH SHALL BE APPLIED WITHIN 7 DAYS AFTER FINAL GRADE HAS BEEN ESTABLISHED. IF DISTURBED AREAS WILL NOT BE RESTORED IMMEDIATELY AFTER ROUGH GRADING, TEMPORARY SEED SHALL BE PLACED.

5. FOR THE FIRST SIX WEEKS AFTER RESTORATION (E.G. SEED & MULCH, EROSION MAT, SOD) OF A DISTURBED AREA, INCLUDE SUMMER WATERING PROVISIONS OF ALL NEWLY SEEDED AND MULCHED AREAS WHENEVER 7 DAYS ELAPSE WITHOUT A RAIN EVENT.

6. EROSION MAT (TYPE I CLASS A PER WISCONSIN D.O.T. P.A.L.) SHALL BE INSTALLED ON ALL SLOPES 3:1 OR GREATER BUT LESS THAN 1:1.

7. SEDIMENT SHALL BE CLEANED FROM CURB AND GUTTER AFTER EACH RAINFALL AND PRIOR TO PROJECT ACCEPTANCE.

8. ALL CONSTRUCTION ENTRANCES SHALL HAVE TEMPORARY ROAD CLOSED SIGNS THAT WILL BE IN PLACE WHEN THE ENTRANCE IS NOT IN USE AND AT THE END OF EACH DAY.

9. ANY PROPOSED CHANGES TO THE EROSION CONTROL PLAN MUST BE SUBMITTED AND APPROVED BY DANE COUNTY LAND CONSERVATION OR PERMITTING MUNICIPALITY.

10. THE VILLAGE MAY REQUIRE ADDITIONAL EROSION CONTROL MEASURES AT ANY TIME DURING CONSTRUCTION.

SEEDING RATES:

TEMPORARY:
1. USE ANNUAL OATS AT 3.0 LB./1,000 S.F. FOR SPRING AND SUMMER PLANTINGS.

PERMANENT:
1. USE WISCONSIN D.O.T. SEED MIX #40 AT 2 LB./1,000 S.F.

FERTILIZING RATES:

TEMPORARY AND PERMANENT:
USE WISCONSIN D.O.T. TYPE A OR B AT 7 LB./1,000 S.F.

MULCHING RATES:

TEMPORARY AND PERMANENT:
USE ½" TO 1-½" STRAW OR HAY MULCH, CRIMPED PER SECTION 607.3.2.3, OR OTHER RATE AND METHOD PER SECTION 627, WISCONSIN D.O.T. STANDARD SPECIFICATIONS FOR HIGHWAY AND STRUCTURE CONSTRUCTION

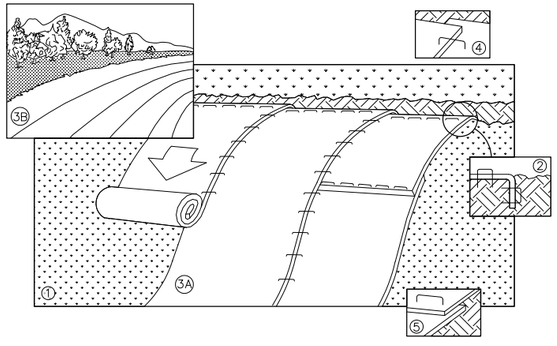

ALL EROSION MAT WILL BE DOT CLASS I, TYPE A W/ SEED AND FERTILIZER (BIODEGRADABLE). ALL STAPLES AND EROSION MAT MUST BE BIODEGRADABLE.

NOTE: REFER TO GENERAL STAPLE PATTERN GUIDE FOR CORRECT STAPLE PATTERN RECOMMENDATIONS FOR SLOPE INSTALLATIONS.

1. PREPARE SOIL BEFORE INSTALLING BLANKETS, INCLUDING APPLICATION OF FERTILIZER AND SEED.
   NOTE: WHEN USING CELL-O-SEED, DO NOT SEED PREPARED AREA.
   CELL-O-SEED MUST BE INSTALLED WITH PAPER SIDE DOWN.
2. BEGIN AT THE TOP OF THE SLOPE BY ANCHORING THE BLANKET IN 6" DEEP BY 6" WIDE TRENCH. BACKFILL AND COMPACT THE TRENCH AFTER STAPLING.
3. ROLL THE BLANKETS <A.> DOWN, OR <B.> HORIZONTALLY ACROSS THE SLOPE.
4. THE EDGES OF PARALLEL BLANKETS MUST BE STAPLED WITH APPROXIMATELY 2" OVERLAP.
5. WHEN BLANKETS MUST BE SPLICED DOWN THE SLOPE, PLACE BLANKETS END OVER END (SHINGLE STYLE) WITH APPROXIMATELY 4" OVERLAP. STAPLE THROUGH OVERLAPPED AREA, APPROXIMATELY 12" APART.
6. ALL BLANKETS MUST BE SECURELY FASTENED TO THE SLOPE BY PLACING STAPLES/STAKES IN APPROPRIATE LOCATIONS AS RECOMMENDED BY THE MANUFACTURER.

2/8 EROSION MAT
NOT TO SCALE

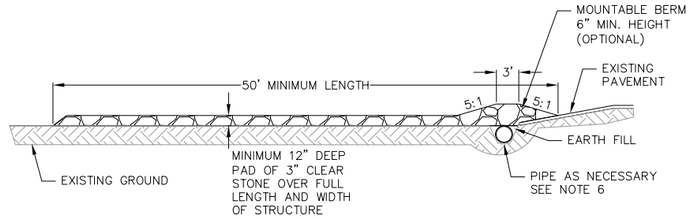

PROFILE VIEW

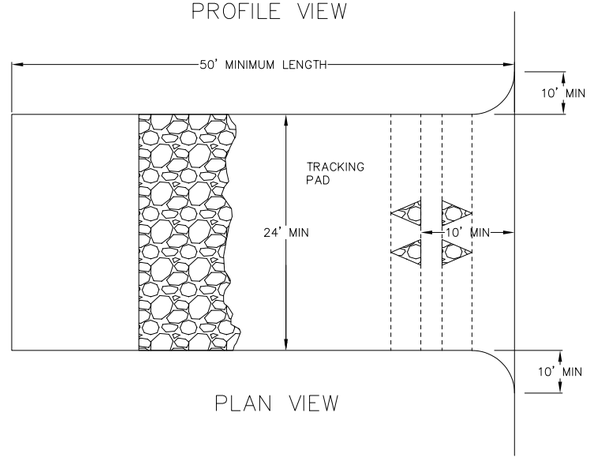

PLAN VIEW

1. FOLLOW WISCONSIN DNR TECHNICAL STANDARD 1057 FOR FURTHER DETAILS AND INSTALLATION.

2. LENGTH – MINIMUM OF 50'.

3. WIDTH – 24' MINIMUM, SHOULD BE FLARED AT THE EXISTING ROAD TO PROVIDE A TURNING RADIUS.

4. ON SITES WITH A HIGH GROUND WATER TABLE OR WHERE SATURATED CONDITIONS EXIST, GEOTEXTILE FABRICSHALL BE PLACED OVER EXISTING GROUND PRIOR TO PLACING STONE. FABRIC SHALL BE WISDOT TYPE-HR GEOTEXTILE FABRIC.

5. STONE – CRUSHED 3" CLEAR STONE SHALL BE PLACED AT LEAST 12" DEEP OVER THE ENTIRE LENGTH AND WIDTH OF ENTRANCE.

6. SURFACE WATER – ALL SURFACE WATER FLOWING TO OR DIVERTED TOWARDS CONSTRUCTION ENTRANCES SHALL BE PIPED THROUGH THE ENTRANCE. MAINTAINING POSITIVE DRAINAGE. PIPE INSTALLED THROUGH THE STABILIZED CONSTRUCTION ENTRANCE SHALL BE PROTECTED WITH A MOUNTABLE BERM WITH 5:1 SLOPES AND MINIMUM OF 6" STONE OVER THE PIPE. PIPE SHALL BE SIZED ACCORDING TO THE DRAINAGE REQUIREMENTS. WHEN THE ENTRANCE IS LOCATED AT A HIGH SPOT AND HAS NO DRAINAGE TO CONVEY A PIPE SHALL NOT BE NECESSARY. THE MINIMUM PIPE DIAMETER SHALL BE 6". CONTRACTOR SHALL BE RESPONSIBLE FOR THE MAINTENANCE OF SAID PIPE.

7. LOCATION – A STABILIZED CONSTRUCTION ENTRANCE SHALL BE LOCATED WHERE CONSTRUCTION TRAFFIC ENTERS AND/OR LEAVES THE CONSTRUCTION SITE. VEHICLES LEAVING THE SITE MUST TRAVEL OVER THE ENTIRE LENGTH OF THE TRACKING PAD.

3/8 TRACKING PAD
NOT TO SCALE

vierbicher
planners engineers advisors

EROSION CONTROL DETAILS
REIGSTAD STREET RECONSTRUCTION
VILLAGE OF DEFOREST
DANE COUNTY, WI

REVISIONS
NO. DATE REMARKS

REVISIONS
NO. DATE REMARKS

DATE
JANUARY 2023
DRAFTER
NADE
CHECKED
CHECKED
PROJECT NO.
230325
SHEET
8 OF 8

08 Nov 2023 - 9:38a R:\DeForest, Village of\230325 - Reigstad Street Reconstruction\CADD\Reigstad Street Title_Gen Notes_Details.dwg by: nade